PINKYS IRON DOORS

AIR SERIES FIXED WINDOW (HVHZ) (IMPACT)

GENERAL NOTES:

1. THE PRODUCT SHOWN HEREIN IS DESIGNED AND MANUFACTURED TO COMPLY WITH THE CURRENT EDITION FLORIDA BUILDING CODE (FBC), **INCLUDING** HVHZ AND HAS BEEN EVALUATED ACCORDING TO THE FOLLOWING:
   - TAS 201-94
   - TAS 202-94
   - TAS 203-94
   - AAMA/WDMA/CSA 101/I.S.2/A440-17
   - ASTM E1886-19
   - ASTM E1996-20

2. ADEQUACY OF THE EXISTING STRUCTURAL CONCRETE/MASONRY, 2X FRAMING, AND METAL FRAMING AS A MAIN WIND FORCE RESISTING SYSTEM CAPABLE OF WITHSTANDING AND TRANSFERRING APPLIED PRODUCT LOADS TO THE FOUNDATION IS THE RESPONSIBILITY OF THE ENGINEER OR ARCHITECT OF RECORD FOR THE PROJECT OF INSTALLATION.

3. 1X AND 2X BUCKS (WHEN USED) SHALL BE DESIGNED AND ANCHORED TO PROPERLY TRANSFER ALL LOADS TO THE STRUCTURE. BUCK DESIGN AND INSTALLATION IS THE RESPONSIBILITY OF THE ENGINEER OR ARCHITECT OF RECORD FOR THE PROJECT OF INSTALLATION.

4. INSTALL INDIVIDUAL INSTALLATION ANCHORS WITHIN A TOLERANCE OF ±1/2 INCH OF THE DEPICTED LOCATION IN THE ANCHOR LAYOUT DETAIL (I.E., WITHOUT CONSIDERATION OF TOLERANCES). TOLERANCES ARE NOT CUMULATIVE FROM ONE INSTALLATION ANCHOR TO THE NEXT.

5. THE INSTALLATION DETAILS DESCRIBED HEREIN ARE GENERIC AND MAY NOT REFLECT ACTUAL CONDITIONS FOR A SPECIFIC SITE. IF SITE CONDITIONS CAUSE INSTALLATION TO DEVIATE FROM THE REQUIREMENTS DETAILED HEREIN, A LICENSED ENGINEER OR ARCHITECT SHALL PREPARE SITE SPECIFIC DOCUMENTS FOR USE WITH THIS DOCUMENT.

6. APPROVED IMPACT PROTECTIVE SYSTEM IS **NOT REQUIRED** ON THIS PRODUCT IN AREAS REQUIRING IMPACT RESISTANCE.

7. WINDOW FRAME MATERIAL: STEEL

8. GLASS MEETS THE REQUIREMENTS OF ASTM E1300 GLASS CHARTS. SEE SHEET 1 FOR GLAZING DETAIL.

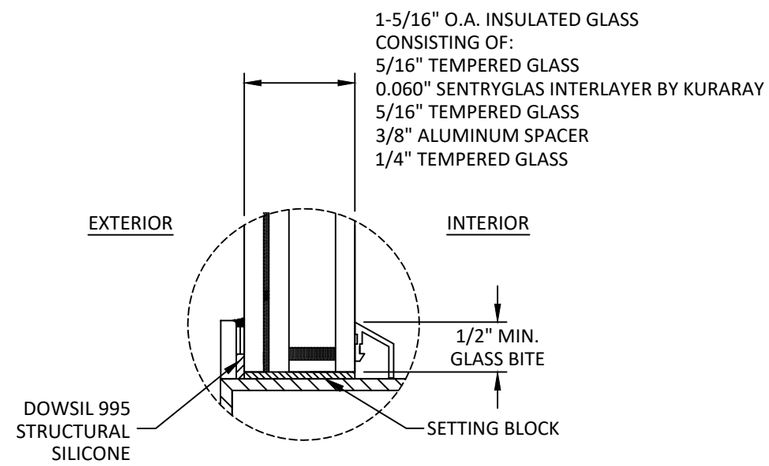

GLAZING DETAIL 1

GLAZING NOTES:
1. GLASS TYPE COMPLIES WITH ASTM E1300 REQUIREMENTS. PER THE FBC TEMPER AND SAFETY GLAZING REQUIREMENTS SHALL BE REVIEWED ON A SITE SPECIFIC BASIS.
2. SETTING BLOCK DUROMETER HARDNESS OF 70-90 (SHORE A) AS REFERENCED IN FBC CHAPTER 24.
3. SETTING BLOCKS TO BE LOCATED AT 1/4 SPAN LENGTH FOR GLASS WIDER THAN 36" AS PER FBC CHAPTER 24.
4. D.L.O. AND DESIGN PRESSURES MAY NOT EXCEED MAX VALUES SHOWN HEREIN.

TABLE OF CONTENTS

SHEET	SHEET DESCRIPTION
1	GENERAL NOTES & GLAZING DETAIL
2	ELEVATION & DESIGN PRESSURE TABLE
3	ANCHOR LAYOUTS
4	VERTICAL SECTION
5	HORIZONTAL SECTION
6	INSTALLATION NOTES & ANCHOR DETAILS

DESIGN PRESSURE RATING (PSF)

CONFIGURATION	WIDTH (IN.)	HEIGHT (IN.)	DESIGN PRESSURE	MISSILE IMPACT RATING
"O"	SEE SHEET 2			LARGE & SMALL MISSILE IMPACT

PINKYS IRON DOORS
2382 EAST 48TH STREET
VERNON, CA 90058
PH: (844) 843-6677

TITLE: AIR SERIES FIXED WINDOW (HVHZ)(IMPACT)

GENERAL NOTES & GLAZING DETAIL

PREPARED BY:
BUILDING DROPS, INC.
1900 NE MIAMI COURT, STE. 2-15
MIAMI, FL 33132
PH: (954)399-8478
FAX: (954)744.4738
WEB: www.buildingdrops.com

REMARKS	BY	DATE

THE INSTALLATION DETAILS DESCRIBED HEREIN ARE GENERIC AND MAY NOT REFLECT ACTUAL CONDITIONS FOR A SPECIFIC SITE. IF SITE CONDITIONS CAUSE INSTALLATION TO DEVIATE FROM THE REQUIREMENTS DETAILED HEREIN, A LICENSED ENGINEER OR ARCHITECT SHALL PREPARE SITE SPECIFIC DOCUMENTS FOR USE WITH THIS DOCUMENT

Digitally signed by Hermes F. Norero, P.E.
Reason: I am approving this document
Date: 2026.02.13 10:47:09 -05'00'

HERMES F. NORERO LICENSE No. 73778 STATE OF FLORIDA PROFESSIONAL ENGINEER

HERMES F. NORERO, P.E.
FLORIDA P.E. No 73778
BUILDING DROPS, INC
1900 NE MIAMI COURT, STE. 2-15
MIAMI, FL 33132
FBPE CERT. OF AUTHORIZATION No. 29578

FL48057

DATE:	10.24.23
DWG. BY: HJ	CHK. BY: HFN
SCALE:	NTS
DWG:	PID003
SHEET:	1 OF 6

2/13/2026 3:44 PM
c:\users\harleyjeanty\building drops, inc\building drops landing - common\projects\pinkys iron doors\fbc-23-0834 - fbc submittal - steel door w sidelites & fixed window\dwgs\pid003.dwg

2/13/2026 3:44 PM
c:\users\harleyjeanty\building drops, inc\building drops landing - common\projects\pinkys iron doors\fbc-23-0834 - fbc submittal - steel door w sidelites & fixed window\dwgs\pid003.dwg

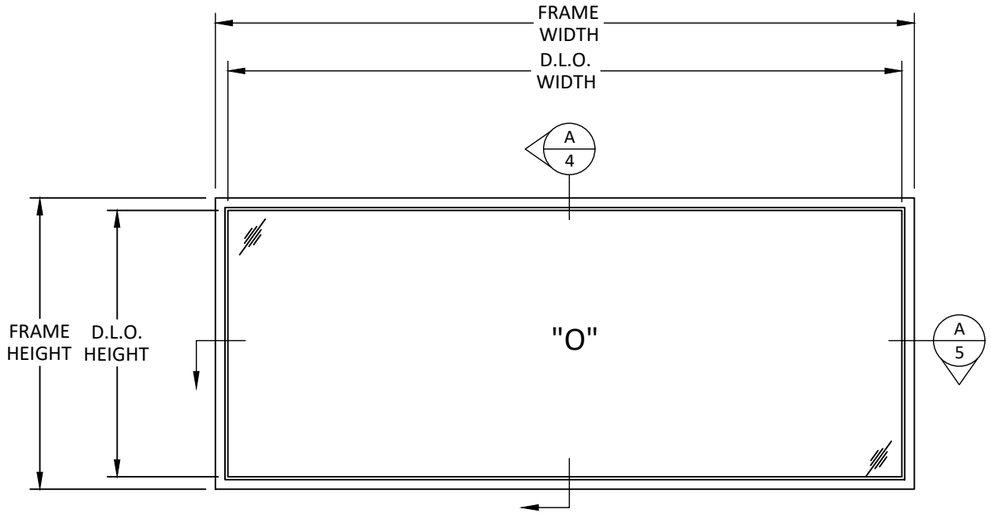

ELEVATION

FIXED WINDOW

D.L.O. HEIGHT = FRAME HEIGHT - 5.5"
D.L.O. WIDTH = FRAME WIDTH - 5.5"

DESIGN PRESSURE TABLE (PSF)			
NOMINAL DIMS.			
FRAME WIDTH (IN.)	FRAME HEIGHT (IN.)	POS. (+)	NEG. (-)
30	108	65.0	65.0
36		65.0	65.0
42		65.0	65.0
48		65.0	65.0
54		65.0	65.0
60		65.0	65.0
66		59.0	59.0
72		54.0	54.0
78		50.0	50.0
30	114	65.0	65.0
36		65.0	65.0
42		65.0	65.0
48		65.0	65.0
54		65.0	65.0
60		65.0	65.0
66		59.0	59.0
72		54.0	54.0
30	120	65.0	65.0
36		65.0	65.0
42		65.0	65.0
48		65.0	65.0
54		65.0	65.0
60		65.0	65.0
66		59.0	59.0
72		54.0	54.0
30	126	65.0	65.0
36		65.0	65.0
42		65.0	65.0
48		65.0	65.0
54		65.0	65.0
60		65.0	65.0
66		59.0	59.0
30	132	65.0	65.0
36		65.0	65.0
42		65.0	65.0
48		65.0	65.0
54		65.0	65.0
60		65.0	65.0
30	138	65.0	65.0
36		65.0	65.0
42		65.0	65.0
48		65.0	65.0
54		65.0	65.0
60		65.0	65.0
30	144	65.0	65.0
36		65.0	65.0
42		65.0	65.0
48		65.0	65.0
54		65.0	65.0
60		65.0	65.0

DESIGN PRESSURE TABLE (PSF)			
NOMINAL DIMS.			
FRAME WIDTH (IN.)	FRAME HEIGHT (IN.)	POS. (+)	NEG. (-)
30	150	65.0	65.0
36		65.0	65.0
42		65.0	65.0
48		65.0	65.0
54		65.0	65.0
30	156	65.0	65.0
36		65.0	65.0
42		65.0	65.0
48		65.0	65.0
54		65.0	65.0
30	162	65.0	65.0
36		65.0	65.0
42		65.0	65.0
48		65.0	65.0
30	168	65.0	65.0
36		65.0	65.0
42		65.0	65.0
48		65.0	65.0
30	174	65.0	65.0
36		65.0	65.0
42		65.0	65.0
48		65.0	65.0
30	180	65.0	65.0
36		65.0	65.0
42		65.0	65.0
48		65.0	65.0
30	186	65.0	65.0
36		65.0	65.0
42		65.0	65.0
30	192	65.0	65.0
36		65.0	65.0
42		65.0	65.0
30	198	65.0	65.0
36		65.0	65.0
42		65.0	65.0
30	204	65.0	65.0
36		65.0	65.0
42		65.0	65.0

NOTE:
WINDOW WIDTH (W) AND HEIGHT (H) ARE INTERCHANGEABLE FOR ALL SIZES SHOWN HEREIN NOT TO EXCEED MAXIMUM TESTED SQUARE FOOT AREA. ANCHOR SPACING SHALL NOT EXCEED THOSE SHOWN FOR LONG OR SHORT LEG OF UNIT, SEE TABLE ABOVE AND SHEET 2.

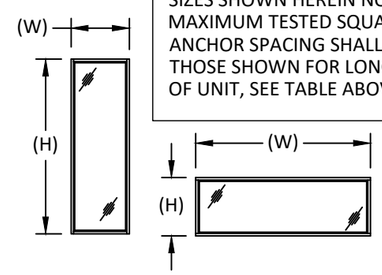

PINKYS IRON DOORS
2382 EAST 48TH STREET
VERNON, CA 90058
PH: (844) 843-6677

TITLE: AIR SERIES FIXED WINDOW (HVHZ)(IMPACT)
ELEVATION
& DESIGN PRESSURE TABLE

PREPARED BY:
BUILDING DROPS, INC.
1900 NE MIAMI COURT, STE. 2-15
MIAMI, FL 33132
PH: (954)399-8478
FAX: (954)744.4738
WEB: www.buildingdrops.com

REMARKS	BY	DATE

THE INSTALLATION DETAILS DESCRIBED HEREIN ARE GENERIC AND MAY NOT REFLECT ACTUAL CONDITIONS FOR A SPECIFIC SITE. IF SITE CONDITIONS CAUSE INSTALLATION TO DEVIATE FROM THE REQUIREMENTS DETAILED HEREIN, A LICENSED ENGINEER OR ARCHITECT SHALL PREPARE SITE SPECIFIC DOCUMENTS FOR USE WITH THIS DOCUMENT

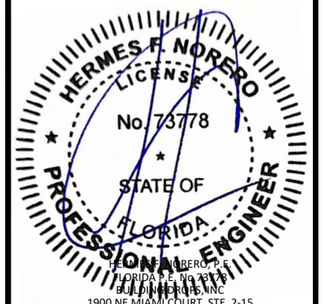

HERMES F. NORERO, P.E.
FLORIDA P.E. No 73778
BUILDING DROPS, INC
1900 NE MIAMI COURT, STE. 2-15
MIAMI, FL 33132
FBPE CERT. OF AUTHORIZATION No. 29578

FL48057

DATE: 10.24.23

DWG. BY: HJ

CHK. BY: HFN

SCALE: NTS

DWG: PID003

SHEET: 2

OF 6

2/13/2026 3:44 PM
c:\users\harleyjeanty\building drops, inc\building drops landing - common\projects\pinkys iron doors\fbc-23-0834 - fbc submittal - steel door w sidelites & fixed window\dwgs\pid003.dwg

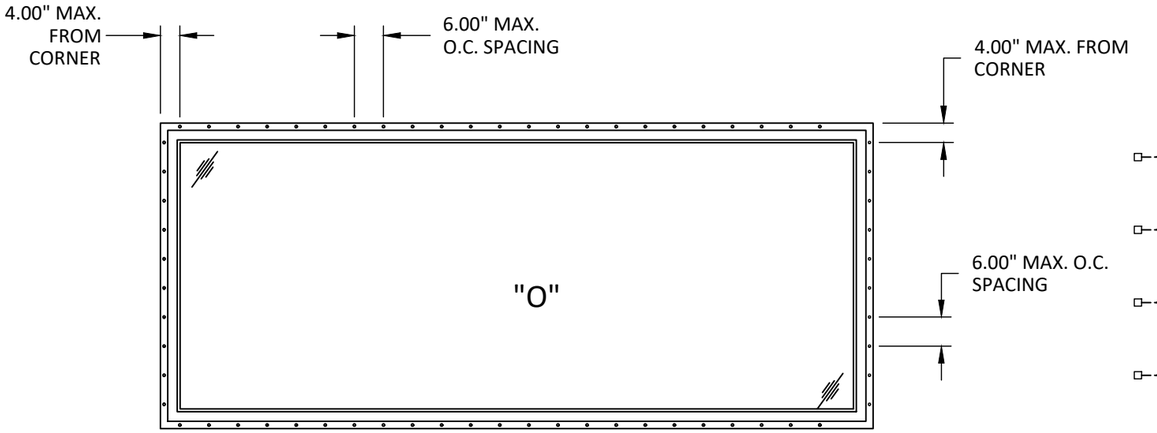

ANCHOR LAYOUT
NAIL FIN INSTALLATION

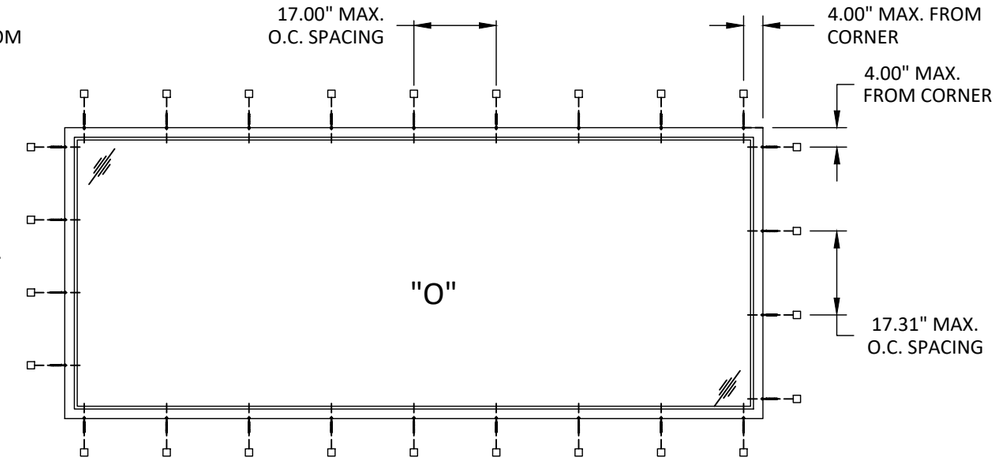

ANCHOR LAYOUT
THROUGH FRAME INSTALLATION

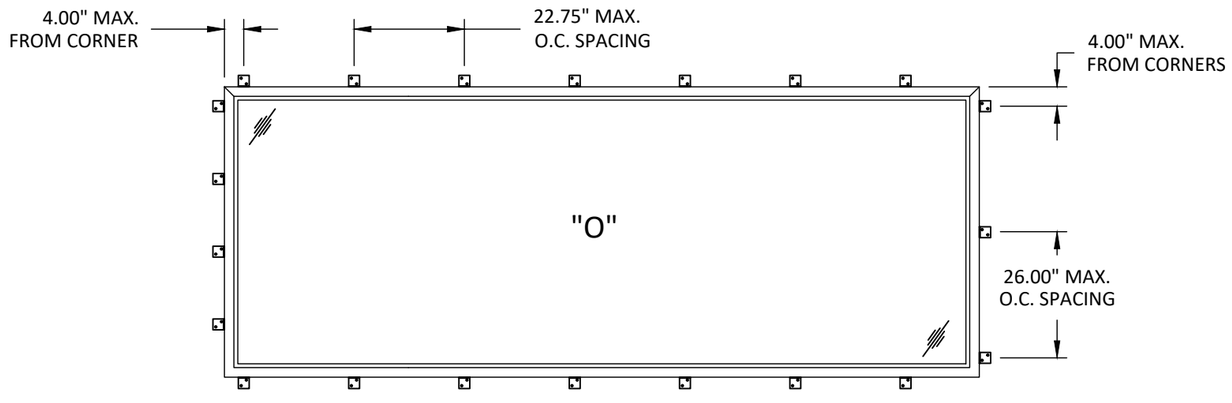

ANCHOR LAYOUT
TAB INSTALLATION

NOTE: (2) TWO ANCHORS REQUIRED PER TAB LOCATION.

ANCHOR LEGEND	
○	NAIL FIN ANCHOR LOCATION
▫——	THROUGH FRAME ANCHOR LOCATION
⊡	TAB LOCATION

PINKYS IRON DOORS
2382 EAST 48TH STREET
VERNON, CA 90058
PH: (844) 843-6677

TITLE: AIR SERIES FIXED WINDOW (HVHZ)(IMPACT)
ANCHOR LAYOUTS

PREPARED BY:
BUILDING DROPS, INC.
1900 NE MIAMI COURT, STE. 2-15
MIAMI, FL 33132
PH: (954)399-8478
FAX: (954)744.4738
WEB: www.buildingdrops.com

REMARKS	BY	DATE

THE INSTALLATION DETAILS DESCRIBED HEREIN ARE GENERIC AND MAY NOT REFLECT ACTUAL CONDITIONS FOR A SPECIFIC SITE. IF SITE CONDITIONS CAUSE INSTALLATION TO DEVIATE FROM THE REQUIREMENTS DETAILED HEREIN, A LICENSED ENGINEER OR ARCHITECT SHALL PREPARE SITE SPECIFIC DOCUMENTS FOR USE WITH THIS DOCUMENT

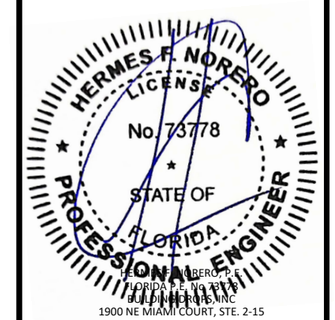

HERMES F. NORERO, P.E.
FLORIDA P.E. No. 73778
BUILDING DROPS, INC
1900 NE MIAMI COURT, STE. 2-15
MIAMI, FL 33132
FBPE CERT. OF AUTHORIZATION No. 29578

FL48057

DATE:	10.24.23
DWG. BY: HJ	CHK. BY: HFN
SCALE:	NTS
DWG:	PID003
SHEET:	3

OF 6

2/13/2026 3:44 PM
c:\users\harleyjeanty\building drops, inc\building drops landing - common\projects\pinkys iron doors\fbc-23-0834 - fbc submittal - steel door w sidelites & fixed window\dwgs\pid003.dwg

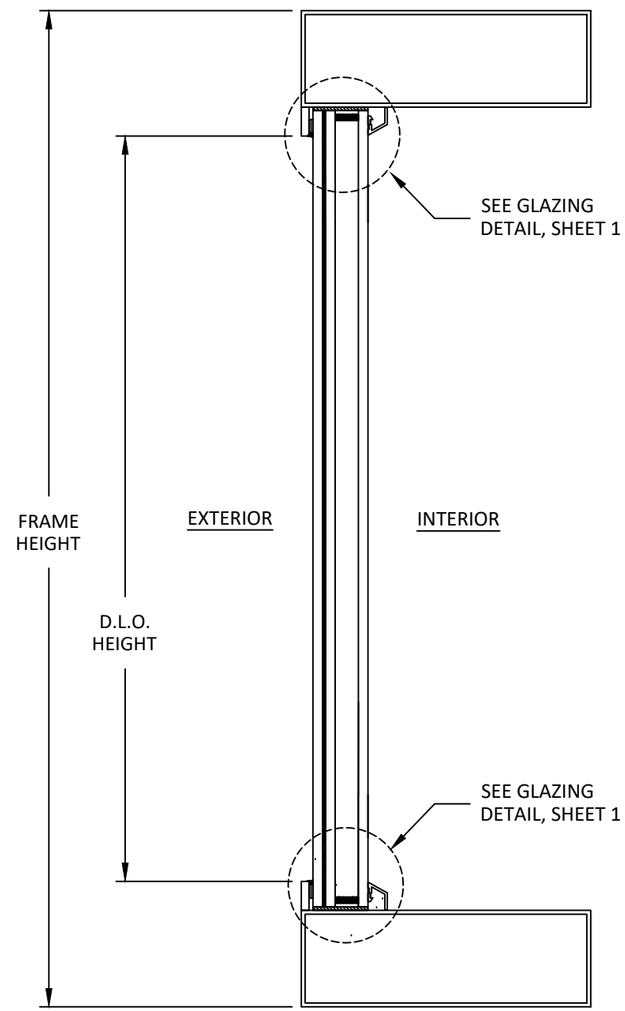

A/4 VERTICAL SECTION

FIXED WINDOW

PINKYS IRON DOORS
2382 EAST 48TH STREET
VERNON, CA 90058
PH: (844) 843-6677

TITLE: AIR SERIES FIXED WINDOW (HVHZ)(IMPACT)

VERTICAL SECTION

PREPARED BY: BUILDING DROPS, INC.
1900 NE MIAMI COURT, STE. 2-15
MIAMI, FL 33132
PH: (954)399-8478
FAX: (954)744.4738
WEB: www.buildingdrops.com

REMARKS	BY	DATE

THE INSTALLATION DETAILS DESCRIBED HEREIN ARE GENERIC AND MAY NOT REFLECT ACTUAL CONDITIONS FOR A SPECIFIC SITE. IF SITE CONDITIONS CAUSE INSTALLATION TO DEVIATE FROM THE REQUIREMENTS DETAILED HEREIN, A LICENSED ENGINEER OR ARCHITECT SHALL PREPARE SITE SPECIFIC DOCUMENTS FOR USE WITH THIS DOCUMENT

HERMES F. NORERO
LICENSE
No. 73778
STATE OF
FLORIDA
PROFESSIONAL ENGINEER

HERMES F. NORERO, P.E.
FLORIDA P.E. No. 73778
BUILDING DROPS, INC
1900 NE MIAMI COURT, STE. 2-15
MIAMI, FL 33132
FBPE CERT. OF AUTHORIZATION No. 29578

FL48057

DATE: 10.24.23	
DWG. BY: HJ	CHK. BY: HFN
SCALE: NTS	
DWG: PID003	
SHEET: 4 OF 6	

2/13/2026 3:44 PM
c:\users\harleyjeanty\building drops, inc\building drops landing - common\projects\pinkys iron doors\fbc-23-0834 - fbc submittal - steel door w sidelites & fixed window\dwgs\pid003.dwg

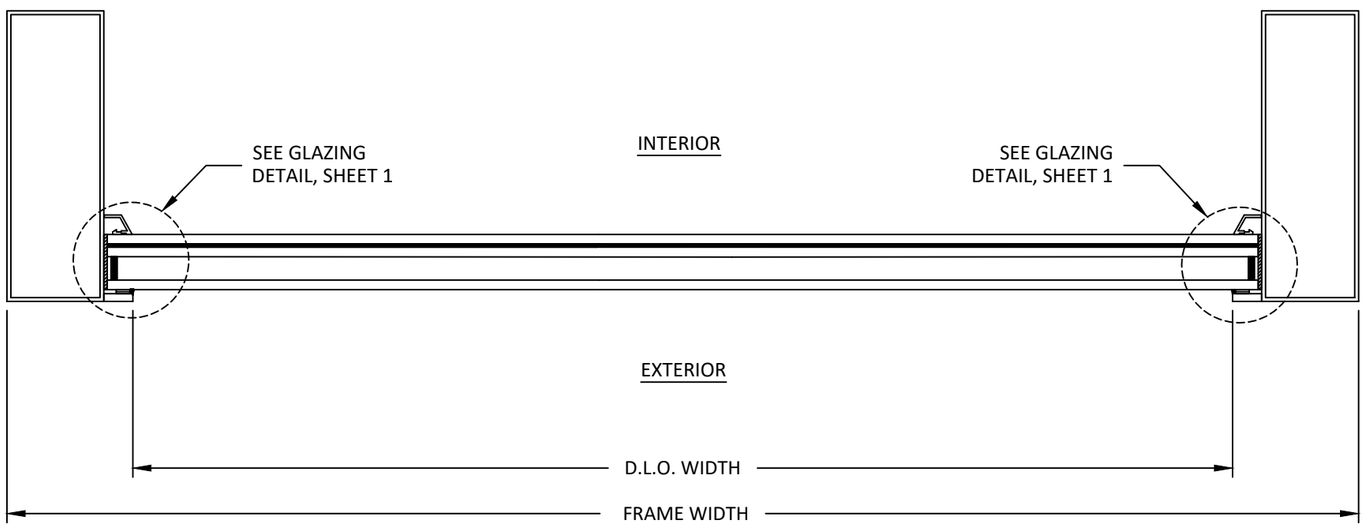

A/5 HORIZONTAL SECTION
FIXED WINDOW

PINKYS IRON DOORS
2382 EAST 48TH STREET
VERNON, CA 90058
PH: (844) 843-6677

TITLE: AIR SERIES FIXED WINDOW (HVHZ)(IMPACT)
HORIZONTAL SECTION

PREPARED BY:
BUILDING DROPS, INC.
1900 NE MIAMI COURT, STE. 2-15
MIAMI, FL 33132
PH: (954)399-8478
FAX: (954)744.4738
WEB: www.buildingdrops.com

REMARKS	BY	DATE

THE INSTALLATION DETAILS DESCRIBED HEREIN ARE GENERIC AND MAY NOT REFLECT ACTUAL CONDITIONS FOR A SPECIFIC SITE. IF SITE CONDITIONS CAUSE INSTALLATION TO DEVIATE FROM THE REQUIREMENTS DETAILED HEREIN, A LICENSED ENGINEER OR ARCHITECT SHALL PREPARE SITE SPECIFIC DOCUMENTS FOR USE WITH THIS DOCUMENT

HERMES F. NORERO
LICENSE
No. 73778
STATE OF
FLORIDA
PROFESSIONAL ENGINEER

HERMES F. NORERO, P.E.
FLORIDA P.E. No 73778
BUILDING DROPS, INC
1900 NE MIAMI COURT, STE. 2-15
MIAMI, FL 33132
FBPE CERT. OF AUTHORIZATION No. 29578

FL48057

DATE: 10.24.23	
DWG. BY: HJ	CHK. BY: HFN
SCALE: NTS	
DWG: PID003	
SHEET: 5 OF 6	

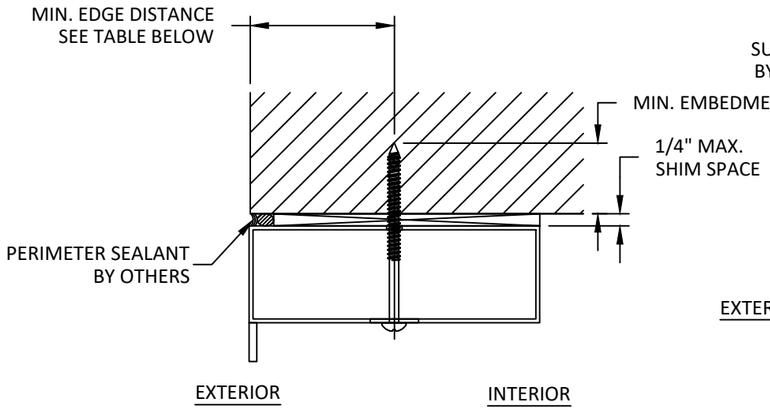

A/6 VERTICAL SECTION

DOOR HEAD
THROUGH FRAME INSTALLATION

JAMB & SILL SIMILAR

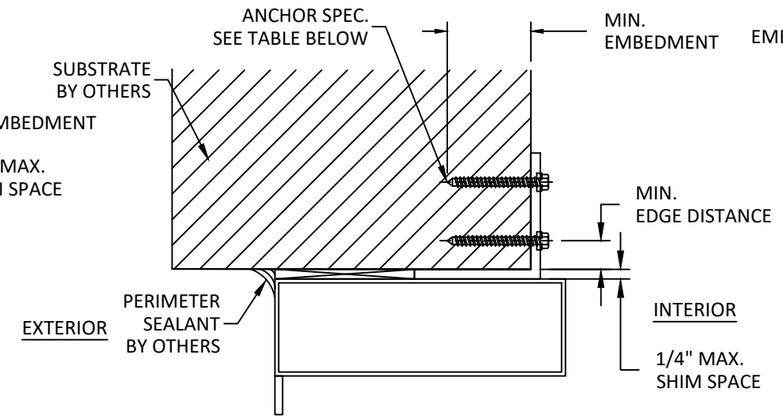

B/6 VERTICAL SECTION

DOOR HEAD
TAB INSTALLATION

JAMB & SILL SIMILAR

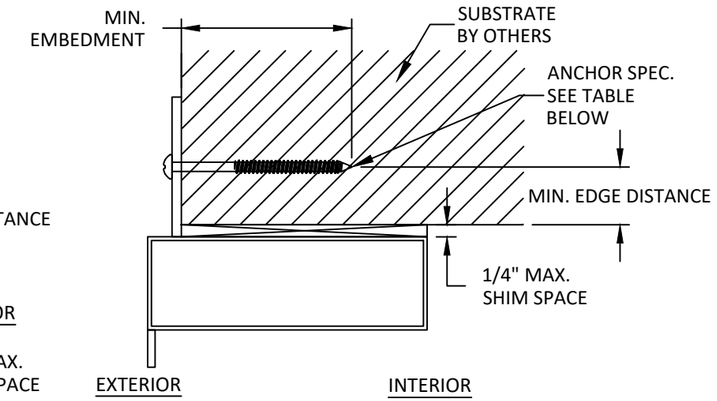

C/6 VERTICAL SECTION

DOOR HEAD
NAIL FIN INSTALLATION

JAMB & SILL SIMILAR

NOTE: (2) TWO ANCHORS REQUIRED PER TAB LOCATION.

INSTALLATION NOTES

1. ONE (1) INSTALLATION ANCHOR IS REQUIRED AT EACH ANCHOR LOCATION SHOWN. UNLESS SPECIFIED ON SHEET 3.
2. THE NUMBER OF INSTALLATION ANCHORS DEPICTED IS THE MINIMUM NUMBER OF ANCHORS TO BE USED FOR PRODUCT INSTALLATION OF THE MAXIMUM SIZE LISTED.
3. INSTALL INDIVIDUAL INSTALLATION ANCHORS WITHIN A TOLERANCE OF ±1/2 INCH THE DEPICTED LOCATION & SPACING IN THE ANCHOR LAYOUT DETAILS (I.E., WITHOUT CONSIDERATION OF TOLERANCES). TOLERANCES ARE NOT CUMULATIVE FROM ONE INSTALLATION ANCHOR TO THE NEXT.
4. SHIM AS REQUIRED AT EACH INSTALLATION ANCHOR WITH LOAD BEARING SHIM(S). MAXIMUM ALLOWABLE SHIM STACK TO BE 1/4 INCH. SHIM WHERE SPACE OF 1/16 INCH OR GREATER OCCURS. SHIM(S) SHALL BE CONSTRUCTED OF HIGH DENSITY PLASTIC OR BETTER.
5. MINIMUM EMBEDMENT AND EDGE DISTANCE EXCLUDE WALL FINISHES, INCLUDING BUT NOT LIMITED TO STUCCO, FOAM, BRICK VENEER, AND SIDING.
6. INSTALLATION ANCHORS AND ASSOCIATED HARDWARE MUST BE MADE OF CORROSION RESISTANT MATERIAL OR HAVE A CORROSION RESISTANT COATING.
7. FOR MASONRY OR CONCRETE OPENINGS, A 1X WOOD BUCK MAY BE USED (OPTIONAL) AS LONG AS THE MINIMUM EMBEDMENT AND EDGE DISTANCE REQUIREMENTS ARE STILL MET WITHIN THE CORRESPONDING HOST SUBSTRATE. SEE GENERAL NOTE #3 ON SHEET 1 FOR MORE INFORMATION.
8. FOR HOLLOW BLOCK AND GROUT FILLED BLOCK, DO NOT INSTALL INSTALLATION ANCHORS INTO MORTAR JOINTS. EDGE DISTANCE IS MEASURED FROM FREE EDGE OF BLOCK OR EDGE OF MORTAR JOINT INTO FACE SHELL OF BLOCK.
9. INSTALLATION ANCHORS SHALL BE INSTALLED IN ACCORDANCE WITH ANCHOR MANUFACTURER'S INSTALLATION INSTRUCTIONS, AND ANCHORS SHALL NOT BE USED IN SUBSTRATES WITH STRENGTHS LESS THAN THE MINIMUM STRENGTH SPECIFIED BY THE ANCHOR MANUFACTURER.

ANCHOR SCHEDULE

METHOD	SUBSTRATE	ANCHOR TYPE	MIN. EMBEDMENT	MIN. EDGE DISTANCE
NAIL FIN INSTALLATION	WOOD: MIN. SG = 0.55	#12 GR. 5 WOOD SCREW	1.50"	0.75"
	METAL: 18 GAUGE STEEL, MIN. Fy = 33KSI ALUMINUM: 1/8" MIN., 6063-T5	#12 GR. 5 SELF-DRILLING SCREW	3 THREADS MIN. PENETRATION BEYOND STRUCTURE	0.50"
TAB & THROUGH FRAME INSTALLATION	WOOD: MIN. SG = 0.55	#12 GR. 5 WOOD SCREW	1.50"	0.75"
	METAL: 18 GAUGE STEEL, MIN. Fy = 33KSI ALUMINUM: 1/8" MIN., 6063-T5	#12 GR. 5 SELF-DRILLING SCREW	3 THREADS MIN. PENETRATION BEYOND STRUCTURE	0.50"
	CONCRETE: f'c=3000PSI	1/4" ITW TAPCON	1.75"	2.50"
	MASONRY: CMU per ASTM C90 MIN. 2000 PSI	1/4" ITW TAPCON	1.00"	2.50"

PINKYS IRON DOORS
2382 EAST 48TH STREET
VERNON, CA 90058
PH: (844) 843-6677

TITLE: AIR SERIES FIXED WINDOW (HVHZ)(IMPACT)
INSTALLATION NOTES & ANCHOR DETAILS

PREPARED BY:
BUILDING DROPS, INC.
1900 NE MIAMI COURT, STE. 2-15
MIAMI, FL 33132
PH: (954)399-8478
FAX: (954)744.4738
WEB: www.buildingdrops.com

REMARKS	BY	DATE

THE INSTALLATION DETAILS DESCRIBED HEREIN ARE GENERIC AND MAY NOT REFLECT ACTUAL CONDITIONS FOR A SPECIFIC SITE. IF SITE CONDITIONS CAUSE INSTALLATION TO DEVIATE FROM THE REQUIREMENTS DETAILED HEREIN, A LICENSED ENGINEER OR ARCHITECT SHALL PREPARE SITE SPECIFIC DOCUMENTS FOR USE WITH THIS DOCUMENT

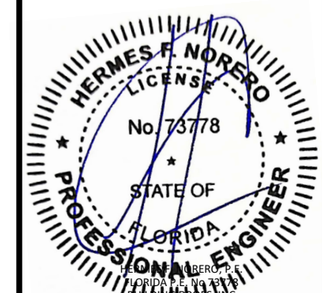

HERMES F. NORERO, P.E.
FLORIDA P.E. No 73778
BUILDING DROPS INC
1900 NE MIAMI COURT, STE. 2-15
MIAMI, FL 33132
FBPE CERT. OF AUTHORIZATION No. 29578

FL48057

DATE: 10.24.23

DWG. BY: HJ | CHK. BY: HFN

SCALE: NTS

DWG: PID003

SHEET: 6 OF 6

2/13/2026 3:44 PM
c:\users\harleyjeanty\building drops, inc\building drops landing - common\projects\pinkys iron doors\fbc-23-0834 - fbc submittal - steel door w sidelites & fixed window\dwgs\pid003.dwg